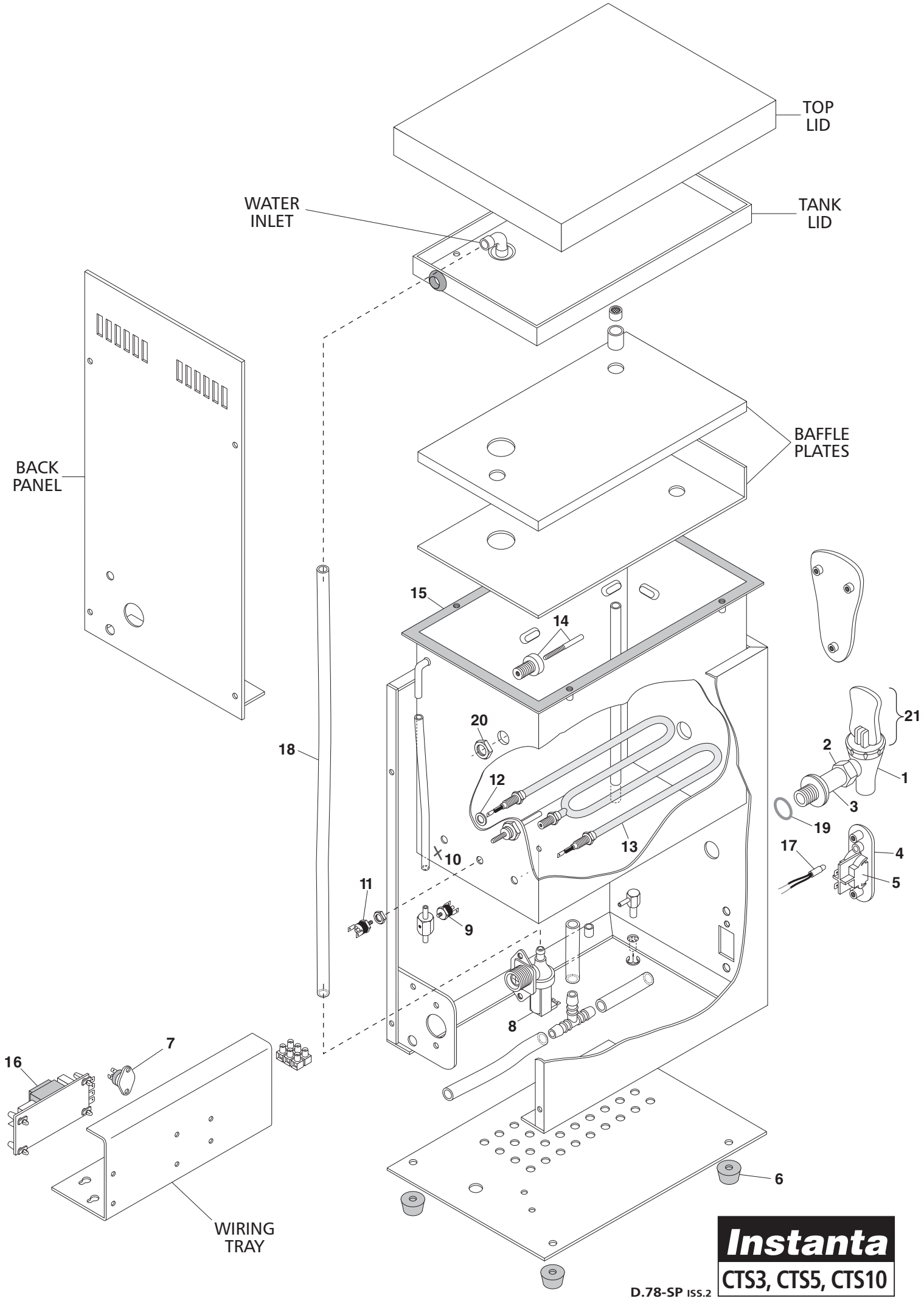

Instanta

CTS3, CTS5, CTS10

D.78-SP ISS.2

CTS3, CTS5 & CTS10 EXPLODED ASSEMBLY DRAWING KEY (D.78-SP)			
Drawing No.	**Description**	**Part No.**	**Price (£)**
1	Draw-off tap	E/TP15/B	66.73
2	Chromed Tap Nut	E/TP2/C	7.31
3	Chromed Tap Extension	E/TP6/C	20.23
4	Plastic switch moulding	EC200/SM	12.80
5	ON/OFF Switch	XE650	12.80
6	Rubber Feet	D208	1.75
7	Triac	XE851	15.83
8	Solenoid valve	SOL9	25.75
9	Over-boil thermal cut-out	XETR7	9.14
10	Thermistor (Dwg shows fixing position on tank)	XE853	13.65
11	Element thermal cut-out	XETR5	9.14
12	Silicone rubber element washers	XEN100/W	1.38
13	Element (3.0KW for 1000-C and 2.25KW for 1000-M)	XEN200 (1000-C & 1500) XEN225 (1000-M)	69.08
14	Probe Assembly	PRB12/A	21.00
15	Tank Gasket (1000-C & 1000-M)	XEN5G	21.00
15	Tank Gasket (1500pou)	EEN15G	25.48
16	P.C.B.	XE150G	95.41
17	Tri-coloured L.E.D. indicator lamp	XE152	10.96
18	Grey Silicone Tube	ACC309/S	9.14
19	Grey Silicone 'O' Ring	XWSH14	2.63
20	Probe Nut	T514	2.00
20	Stainless Steel Probe	PRB1/A	17.05
21	Upper Tap Assembly	XTP1050/A	35.70